H 3026

Dimensions

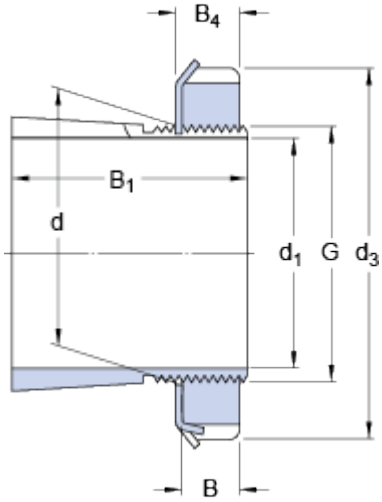

d_1	115	mm
d	130	mm
d_3	155	mm
B_1	80	mm
B	21	mm
B_4	23	mm
G	M 130x2	

Mass

Mass adapter sleeve assembly	2.8	kg

Included products

Lock nut	KML 26
Locking device	MBL 26

Associated products

Hydraulic nut	HMV 26 E