H 2326

Dimensions

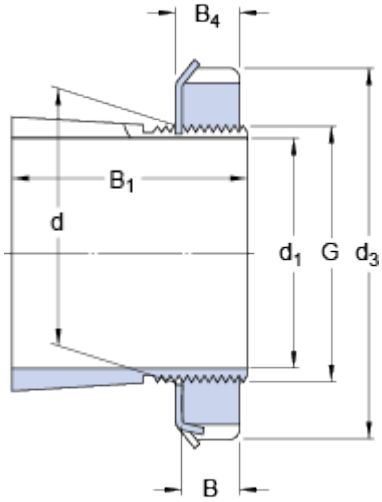

d_1	115	mm
d	130	mm
d_3	165	mm
B_1	121	mm
B	21	mm
B_4	23	mm
G	M 130x2	

Mass

Mass adapter sleeve assembly	4.45	kg

Included products

Lock nut	KM 26
Locking device	MB 26

Associated products

Hydraulic nut	HMV 26 E