6207 NR

SKF Explorer

Dimensions

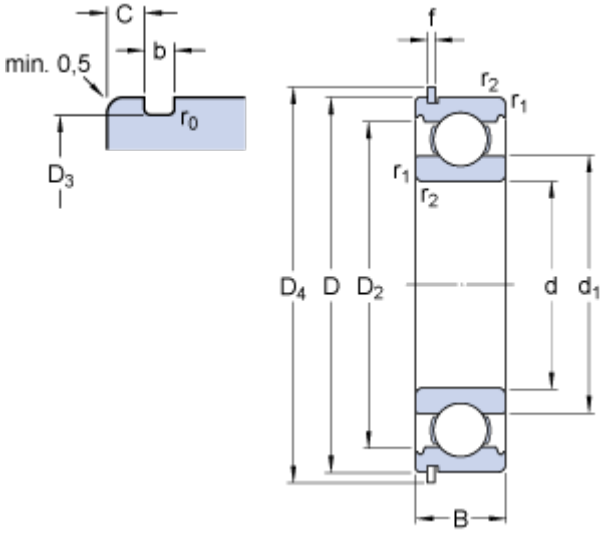

B	17	mm
D_4	78.6	mm

Abutment dimensions

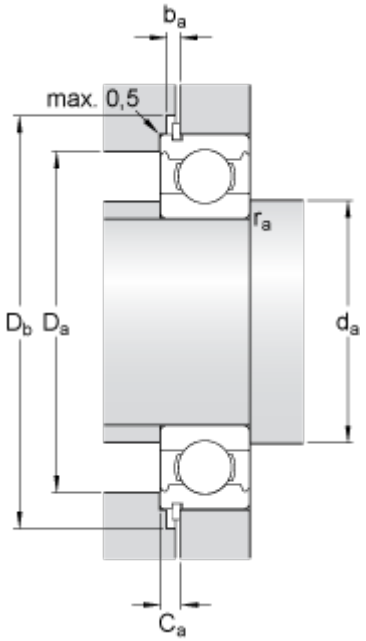

d_a	min.	42	mm
D_a	max.	65	mm
D_b	min.	80	mm
b_a	min.	2.2	mm
C_a	max.	4.98	mm
r_a	max.	1	mm

Calculation data

Basic dynamic load rating	C	27	kN
Basic static load rating	C	15.3	kN
Fatigue load limit	P_u	0.655	kN
Reference speed		20000	r/min
Limiting speed		13000	r/min
Calculation factor	k_r	0.025	
Calculation factor	f	14	

Mass

Mass bearing	0.3	kg