53207 + U 207

Dimensions

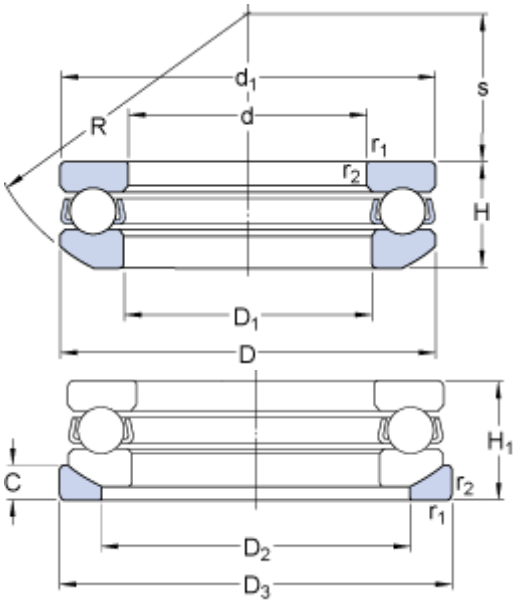

d		35	mm
D		62	mm
H		19.9	mm
H_1		22	mm
d_1	≈	62	mm
D_1	≈	37	mm
D_2		48	mm
D_3		65	mm
C		7	mm
R		50	mm
s		24	mm
$r_{1,2}$	min.	1	mm

Abutment dimensions

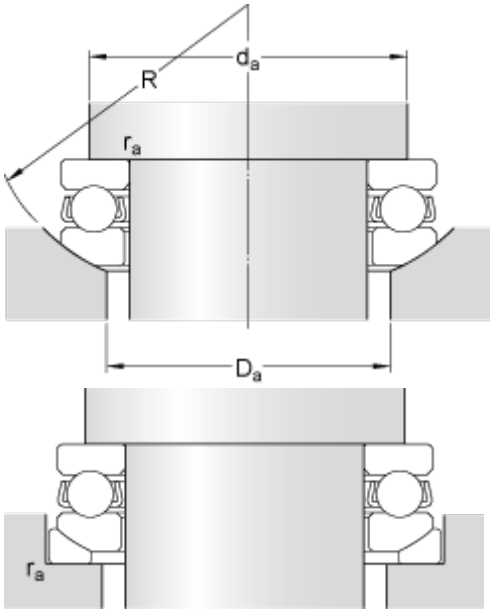

d_a	min.	51	mm
D_a	max.	48	mm
r_a	max.	1	mm

Calculation data

Basic dynamic load rating	C	35.1	kN
Basic static load rating	C	73.5	kN
Fatigue load limit	P_u	2.7	kN
Reference speed		4000	r/min
Limiting speed		5600	r/min
Minimum load factor	A	0.028	

Mass

Mass bearing (including seat washer where applicable)	0.28	kg